KISTLER
measure. analyze. innovate.

Piezoelectric pressure sensor

Type 601C...

for Test & Measurement applications

The miniature pressure sensors of the Type 601C series are, due to their high sensitivity, suited for a variety of applications where very small pressure pulsations need to be measured. In addition, the optimized diaphragm ensures accurate dynamic pressure measurements, even when the diaphragm is simultaneously exposed to a high thermal shock.

- Pressure range up to 250 bar (3 626 psi)
- High sensitivity
- Membrane optimized for high thermal shocks
- Small sensor size
- Short rise time & high natural frequency
- Extremely wide operating temperature range
- Charge (PE) or Voltage (IEPE) output

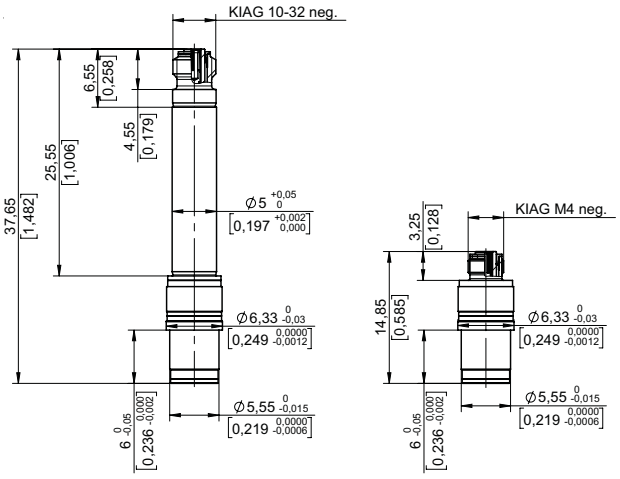

Description

Due to their high natural frequencies, piezoelectric pressure sensors can be used for a variety of applications where dynamic pressures need to be measured. Another unique characteristic of piezoelectric pressure sensors is their ability to measure small pressure fluctuations that are superimposed on top of high static pressures with exceptional resolution. By contrast, piezoresistive pressure sensors are the right choice when measuring static pressure curves.

At the core of the all-welded, hermetically sealed Type 601C series there is a high performance PiezoStar crystal grown by Kistler. This PiezoStar crystal gives the sensor a far higher sensitivity than an equivalently sized pressure sensor based on synthetic Quartz, which results in a lower noise level and so enables lower pressure to be measured more accurately.

The pressure to be measured acts on the sensor's diaphragm and compresses the PiezoStar crystal. The compressed crystal produces a charge which is proportional to the pressure. Finally, the charge signal needs to be converted, by a charge amplifier, into a voltage which can then be read.

Typical applications

- Pressure pulsations on compressors, pumps, turbines, propellers, etc.

- Dynamic pressure measurements with high thermal shocks as for example gas and dust explosions (Ex testing), pyrotechnical devices, closed vessel testing, energetic material testing, sloshing or small dynamic pressures as for example sound pressure, etc.

Charge (PE) vs. Voltage (IEPE) output

One of the most important selection criteria for piezoelectric pressure sensors is the output signal. Two variants of the sensor are available, charge output (PE) and voltage output (IEPE resp. Piezotron).

Piezoelectric pressure sensors are connected to an electronic circuit which converts the charge generated by the sensor into a proportional voltage. If the electronic circuit is integrated into the sensor housing, it is referred to as an IEPE sensor. If the electronics is an external device (charge amplifier), it is referred to as a PE sensor. Depending on the application, PE or IEPE sensors may be better suitable.

IEPE sensors are the ideal solution for the long-term measurement of small pressure pulsations (without any static pressure content) or the measurement of dynamic pressure profiles (up to a few tenths of a millisecond only). IEPE sensors will however, due to the built-in electronics, only work at moderate temperatures and come with a fixed measuring range.

PE sensors on the other hand are the right solution for the long-term measurement of small pressure pulsations (without any static pressure content), quasi-static or dynamic pressure profiles (up to a few minutes). PE sensors will, due to the external charge amplifier, operate at extreme temperatures too and allow for adjustable measuring ranges.

The instruction manual and pressure catalogue provides further details on PE and IEPE sensors, measuring chains as well as applications each technology is best suited for.

601C_003-199e-11.22

This information corresponds to the current state of knowledge. Kistler reserves the right to make technical changes. Liability for consequential damage resulting from the use of Kistler products is excluded.

© 2017 ... 2022 Kistler Group, Eulachstraße 22, 8408 Winterthur, Switzerland Tel. +41 52 224 11 11, info@kistler.com, www.kistler.com. Kistler Group products are protected by various intellectual property rights. For more details visit www.kistler.com

KISTLER
measure. analyze. innovate.

Technical data – PE sensors [1)]

Type 601CA...

Output signal	pC	Charge (PE)
Pressure range	bar psi	0 ... 250 0 ... 3 626
Calibrated partial range	%	2; 20; 100
Overload	bar psi	300 4 350
Sensitivity (nom.)	pC/bar pC/psi	-37.0 -2.6
Linearity (typ.) (max.)	%FSO %FSO	≤±0.1 ≤±0.3
Operating temperature range	°C °F	-196 ... +350 -321 ... +662

Rise time (10 ... 90%)	µs	<1.4
Natural frequency [2)]	kHz	>215
Noise (1 Hz ... 10 kHz) (typ.)	μbar_{rms}	15
Acceleration sensitivity (axial) (typ.)	bar/g psi/g	0.0020 0.0290
Acceleration sensitivity (radial) (typ.)	bar/g psi/g	0.0001 0.0015
Insulation resistance	Ω	$\geq 10^{13}$
Weight Type 601CAA / 601CAB	gram	4.5/1.9
Housing and diaphragm material	17-4 S.S.	

Technical data – IEPE sensors [1)]

Type 601CBA...		**00001.5**	**00003.5**	**00007.0**	**00014.0**	**00035.0**	**00070.0**	**00250.0**
Output signal	V	Voltage (IEPE)						
Pressure range	bar	1.5	3.5	7	14	35	70	250
	psi	22	50	100	200	500	1 000	3 626
Maximum pressure	bar / psi	250 / 3 626						
Overload	bar / psi	300 / 4 350						
Sensitivity (nom.)	mV/bar	3 333	1 429	714	357	143	71	20
	mV/psi	230	99	49	25	9.9	4.9	1.4
Linearity	%FSO	≤±1.0						
Operating temperature range	°C / °F	-55 ... +120 / -67 ... +248						
Rise time (10 ... 90%)	µs	<1.4						
Natural frequency [2)]	kHz	>215						
Time constant (nom.)	s	2	3					
Low frequency response -3 dB	Hz	0.080	0.053					
-5%	Hz	0.242	0.161					
Noise (1 Hz ... 10 kHz) (typ.)	μbar_{rms}	3.5	8	16	32	79	160	567
Acceleration sensitivity (axial) (typ.)	bar/g	0.0020						
	psi/g	0.0290						
Acceleration sensitivity (radial) (typ.)	bar/g	0.0001						
	psi/g	0.0015						
Supply voltage (by IEPE-Coupler)	VDC	22 … 30						
Supply current (by IEPE-Coupler)	mA	2 … 20						
Output bias voltage (nom.)	VDC	11						
Output voltage FSO	V	±5						
Weight	gram	3.6						
Housing and diaphragm material	–	17-4 S.S.						

[1)] Indications are valid for 23°C / 73°F (if not specified otherwise)
[2)] Calculated from rise time

601C_003-199e-11.22

This information corresponds to the current state of knowledge. Kistler reserves the right to make technical changes. Liability for consequential damage resulting from the use of Kistler products is excluded.

© 2017 ... 2022 Kistler Group, Eulachstraße 22, 8408 Winterthur, Switzerland Tel. +41 52 224 11 11, info@kistler.com, www.kistler.com. Kistler Group products are protected by various intellectual property rights. For more details visit www.kistler.com

KISTLER
measure. analyze. innovate.

Mounting (sensors with standard housing)
Sensors with charge output (PE) and voltage output (IEPE) are available with standard housing. Sensors with a standard housing can either be installed directly or with an adapter.

Direct Mounting
When the mounting location space is restricted, the sensor can be located in an appropriately dimensioned mounting bore, and then held in place with a floating clamp nut. Please note that for a reliable and accurate pressure measurement a precise machining of the mounting hole with special reamers and taps is required. For details on mounting hole fabrication please check the manual.

Adapter Mounting
Fitting sensors into a mounting adapter greatly simplifies the installation process (when space and wall thickness are not a premium). Use of a Kistler mounting adapter will eliminate the need to provide a precise mounting configuration and allow the installer to provide only a threaded hole of the size and depth required for the adapter selected. Special reamers or taps are not required when using an adapter. For details on mounting thread fabrication please check the manual. All sensors and adapters are available for download as 3D CAD files from Kistler's webpage.

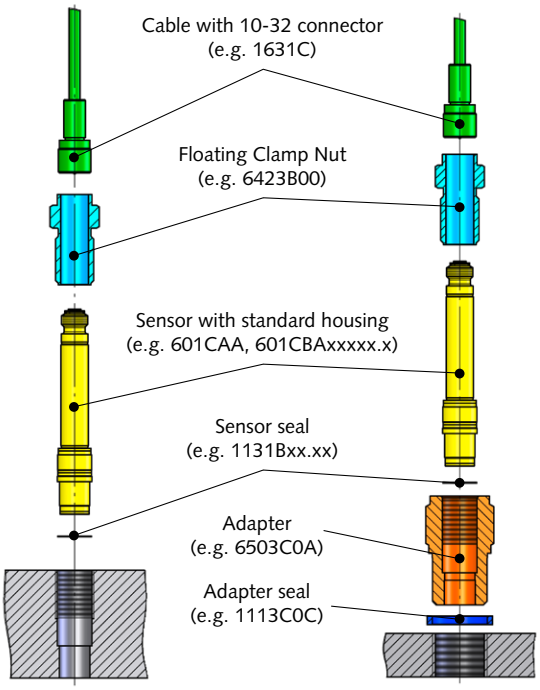

Direct Mounting
- Flush mounting
- Complex drilling with special tool
- Min. structural influences on pressure measurement (mechanical decoupling)
- Ideal for close matrix alignment of sensors

Type 6503CxA Adapter
- M10 and 3/8-24 UNF
- Stainless steel (1.4542)
- Flush mounting
- Max. Pressure 1 000 bar (14 500 psi)

Type 6503CxD Adapter
- M10 and 3/8-24 UNF
- Ground Isolating
- PEEK GF30 (glass fiber reinforced high performance plastic)
- Max. Pressure 100 bar (1 450 psi)
- Max. temperature 100°C (212°F)

Type 6507BxA Adapter
- M3 and 5-40 UNC
- Stainless steel (1.4542)
- Recessed mounting
- Max. Pressure 300 bar (4 350 psi)

Type 6503C3A Adapter
- 1/8-27 NPTF
- Stainless steel (1.4542)
- Almost flush mounting
- Max. Pressure 1 000 bar (14 500 psi)

Type 6509B Adapter
- M14x1.25
- Water Cooling
- Stainless steel (1.4542)
- Max. Pressure 300 bar (4 350 psi)
- Max. temperature 400°C (752°F)

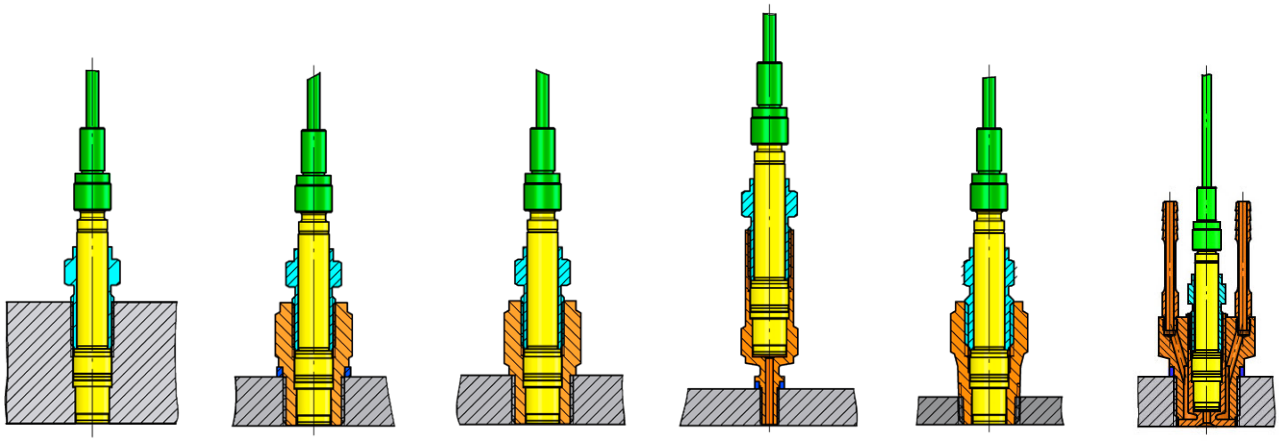

601C_003-199e-11.22

This information corresponds to the current state of knowledge. Kistler reserves the right to make technical changes. Liability for consequential damage resulting from the use of Kistler products is excluded.

© 2017 ... 2022 Kistler Group, Eulachstraße 22, 8408 Winterthur, Switzerland Tel. +41 52 224 11 11, info@kistler.com, www.kistler.com. Kistler Group products are protected by various intellectual property rights. For more details visit www.kistler.com

KISTLER
measure. analyze. innovate.

Mounting (sensors with short housing)
Sensors with charge output (PE) are also available with short housing. For the mounting of these sensors a connector extender of Type 6482A is required. This mounting form is mostly only used where mechanical structures cannot be weakened.

Connector extenders are made to order and are therefore not stock items (unlike floating clamp nuts of Type 6423B). Customers can choose between three different connectors, two different threads and a variable length (see ordering key).

Please note that for a reliable and accurate pressure measurement a precise machining of the mounting hole with special reamers and taps is required (same as for direct mounting, see previous datasheet page). For details on mounting hole fabrication please check the manual. All connector extenders are available for download as 3D CAD files from Kistler's webpage.

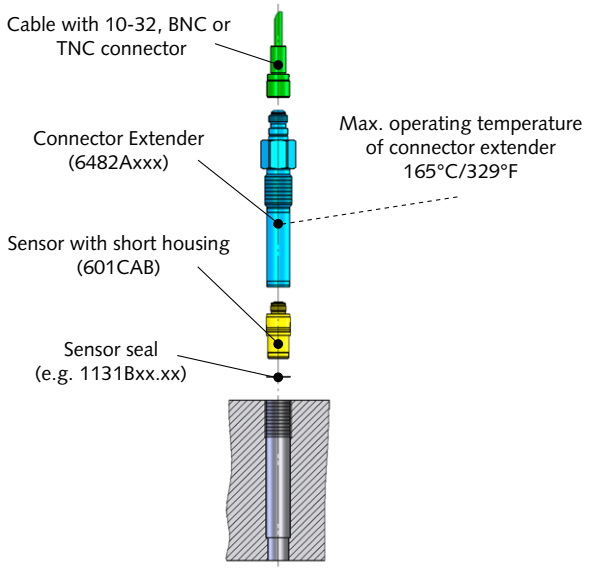

10-32 connector
Small coaxial 10-32 connectors are widely used in the sensor industry and therefore comes with a wide range of high impedance cable options. The small size further allows for sealing the sensor connector with thermo shrink sleeves. Attention needs to be payed to cleanliness of these small connectors.

BNC connector
The BNC connector (bayonet lock) is much bigger and therefor sturdier and less sensitive to contaminations than the widely used 10-32 connector. It's large dimensions and big mass as well the difficulty to be sealed might however be a criterion for exclusion in some applications.

TNC connector
The TNC connector (thread lock) has about the same size, and offers the same advantages and disadvantages, as the BNC connector. Thanks to the thread lock a good sealing against exterior influences is achieved and is therefore the preferred choice when conducting tests outside a laboratory environment.

Ordering key (connector extender)

Type 6482A ☐ ☐ ☐

Connector type

BNC	**0**
TNC	**1**
10-32	**2**

Mounting thread

M7x0.75	**0**
5/16-24 UNF	**1**

Length (in mm)

10	**-10**
13 … 200	**-SP**

Ordering example	**Type**
6482A with BNC, M7 thread, 10 mm length	6482A00-10
6482A with TNC, M7 thread, 15 mm length	6482A10-SP15
6482A with 10-32, UNF thread, 125 mm length	6482A21-SP125

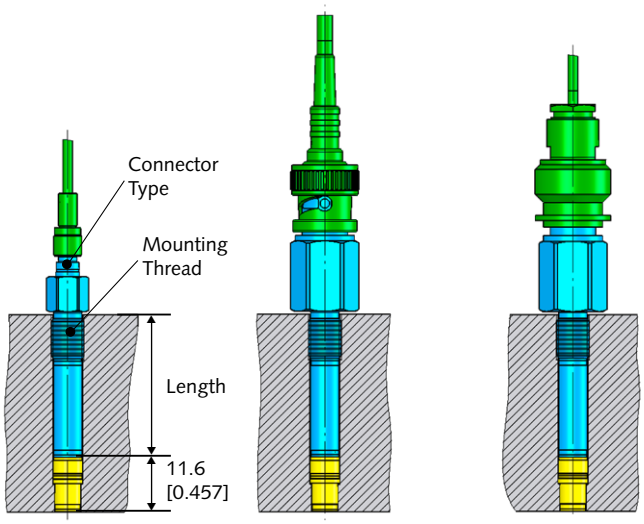

601C_003-199e-11.22

This information corresponds to the current state of knowledge. Kistler reserves the right to make technical changes. Liability for consequential damage resulting from the use of Kistler products is excluded.

© 2017 ... 2022 Kistler Group, Eulachstraße 22, 8408 Winterthur, Switzerland Tel. +41 52 224 11 11, info@kistler.com, www.kistler.com. Kistler Group products are protected by various intellectual property rights. For more details visit www.kistler.com

KISTLER
measure. analyze. innovate.

Waterproof solution (IP68)

For pressure sensors subject to water splashes or even used under water the IP68 rated cable Type 1983A shall be used. The Type 1983A cable, made of FKM rubber, comes with a vulcanized 10-32 connector and is only compatible to pressure sensors with a standard housing.

The Type 1983A cable can be screwed like any other standard cable, or optionally even be welded, to the pressure sensor. Welding, instead of screwing, the cable connector to the sensor offers protection against detachment of the cable in case of strong vibrations. Requirements to weld the connector to the sensor need to be stated at the time of order (see below ordering keys).

Both, screwed and welded, solutions have successfully been qualified for IP68 rating in water with pressures ranging from vacuum to 16 bar.

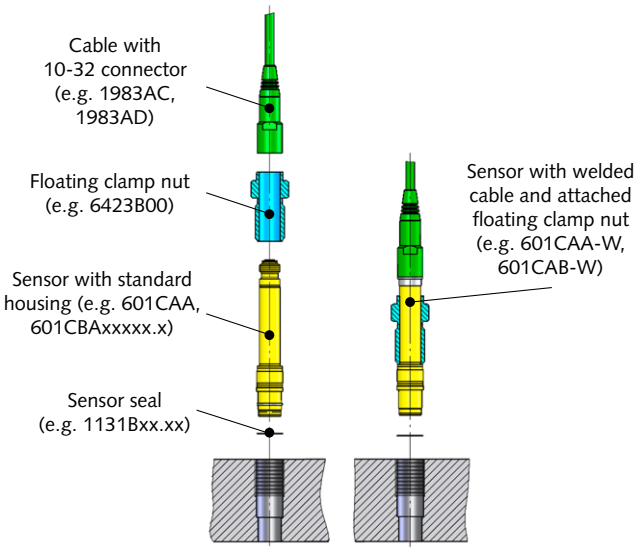

Ordering key (PE sensor with welded 1983A cable)

Type 601CAA-W ☐ ☐ ☐

Floating clamp nut Type

6423B00	**A**
6423B11	**B**

Cable Type

1983AD (with BNC pos. connector)	**A**
1983AC (with 10-32 pos. int. connector)	**B**

Cable length (in m)

1 m (for 1983AC cable only)	**1,0**
2 m (for 1983AC and 1983AD cable)	**2,0**
3 m (for 1983AC cable only)	**3,0**
5 m (for 1983AD cable only)	**5,0**
Customized cable length (0.1 to 30.0 m)	**SP**

Ordering example	**Type**
601CAA with 6423B00 and 2 m 1983AD cable	601CAA-WAA2,0
601CAA with 6423B00 and 6 m 1983AD cable	601CAA-WAASP6,0
601CAA with 6423B11 and 0.5 m 1983AC cable	601CAA-WBBSP0,5

Ordering key (IEPE sensor with welded 1983A cable)

Type 601CBA-W ☐ - ☐ ☐ ☐

IEPE pressure range

1.5 bar / 22 psi	**00001.5**
3.5 bar / 50 psi	**00003.5**
7 bar / 100 psi	**00007.0**
14 bar / 200 psi	**00014.0**
35 bar / 500 psi	**00035.0**
70 bar / 1 000 psi	**00070.0**
250 bar / 3 625 psi	**00250.0**

Floating clamp nut Type

6423B00	**A**
6423B11	**B**

Cable Type

1983AD (with BNC pos. connector)	**A**
1983AC (with 10-32 pos. int. connector)	**B**

Cable length (in m)

1 m (for 1983AC cable only)	**1,0**
2 m (for 1983AC and 1983AD cable)	**2,0**
3 m (for 1983AC cable only)	**3,0**
5 m (for 1983AD cable only)	**5,0**
Customized cable length (0.1 to 30.0 m)	**SP**

Ordering example	**Type**
601CBA00001.5 with 6423B00 and 2 m 1983AD cable	601CBA-W00001.5-AA2,0
601CBA00007.0 with 6423B00 and 6 m 1983AD cable	601CBA-W00007.0-AASP6,0
601CBA00250.0 with 6423B11 and 7 m 1983AC cable	601CBA-W00007.0-BBSP7,0

601C_003-199e-11.22

This information corresponds to the current state of knowledge. Kistler reserves the right to make technical changes. Liability for consequential damage resulting from the use of Kistler products is excluded.

© 2017 ... 2022 Kistler Group, Eulachstraße 22, 8408 Winterthur, Switzerland Tel. +41 52 224 11 11, info@kistler.com, www.kistler.com. Kistler Group products are protected by various intellectual property rights. For more details visit www.kistler.com

KISTLER
measure. analyze. innovate.

Sensors

Type 601CAA
(dimensions in mm [inch])

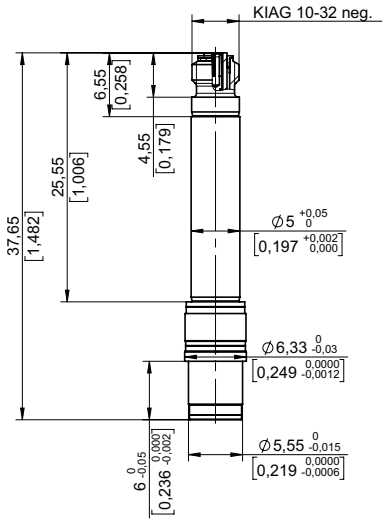

Type 601CAB
(dimensions in mm [inch])

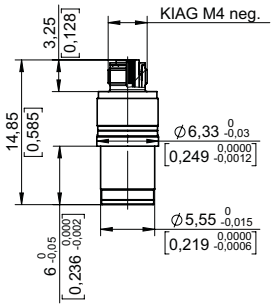

Type 601CBAxxxxx.x
(dimensions in mm [inch])

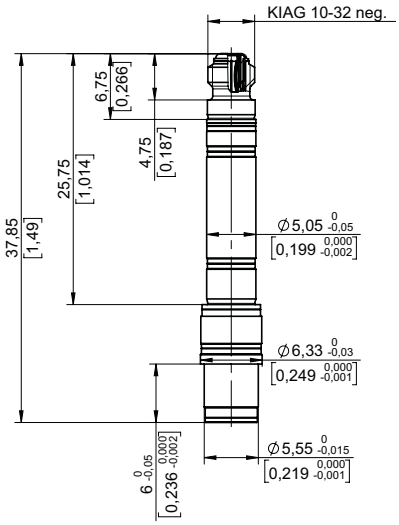

Seals (Sensors)

Type 1131BA0.15
(dimensions in mm [inch])

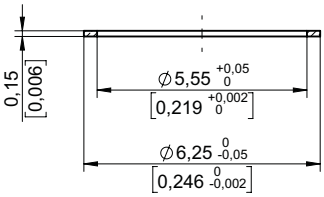

Type 1131BB0.20
(dimensions in mm [inch])

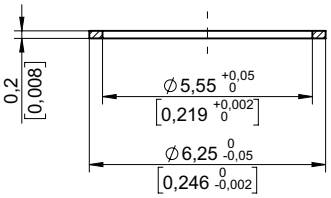

Type 1131BC1.15
(dimensions in mm [inch])

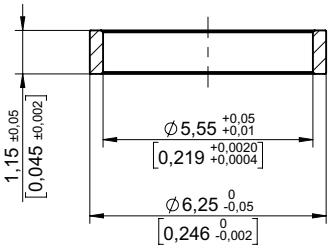

Floating clamp nut

Type 6423B00
(dimensions in mm)

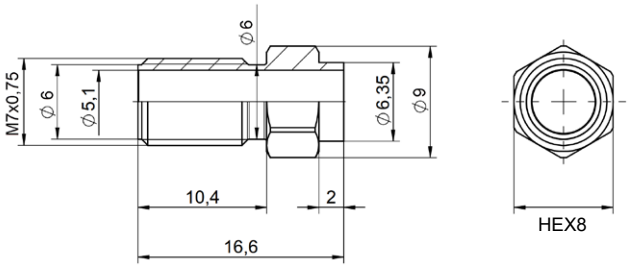

Type 6423B11
(dimensions in inch)

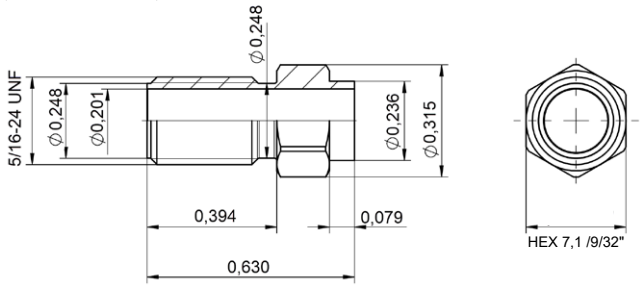

Note: Mounting holes, tightening torques and more can be found in the instruction manual.

3D CAD data can be downloaded free of charge from www.kistler.com/cad-catalog

This information corresponds to the current state of knowledge. Kistler reserves the right to make technical changes. Liability for consequential damage resulting from the use of Kistler products is excluded.

© 2017 ... 2022 Kistler Group, Eulachstraße 22, 8408 Winterthur, Switzerland Tel. +41 52 224 11 11, info@kistler.com, www.kistler.com. Kistler Group products are protected by various intellectual property rights. For more details visit www.kistler.com

601C_003-199e-11.22

KISTLER
measure. analyze. innovate.

Adapter

Type 6503C0A
(dimensions in mm)

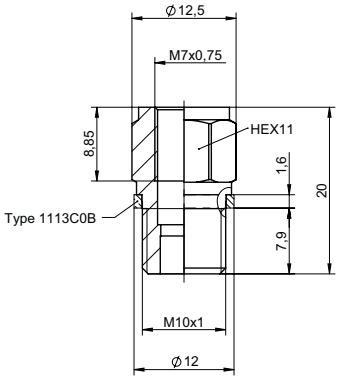

Type 6503C0D
(dimensions in mm)

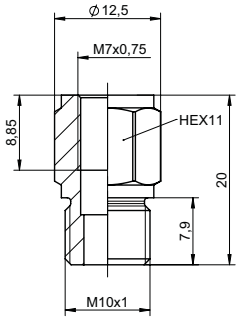

Type 6507B0A
(dimensions in mm)

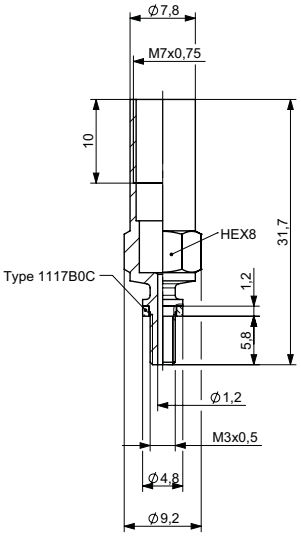

Type 6509B
(dimensions in mm)

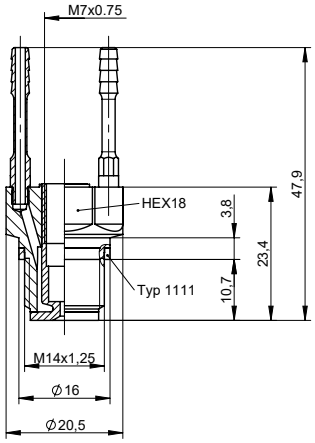

Type 6501B0A
(dimensions in mm)

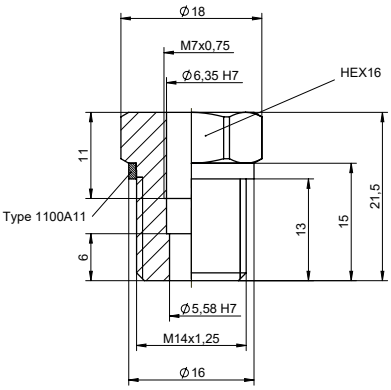

Type 6503C1A
(dimensions in inch)

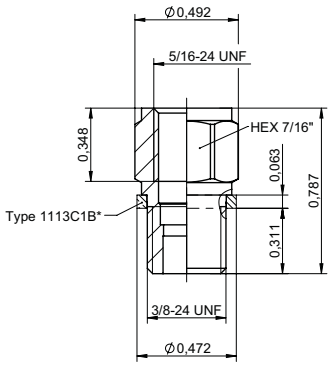

Type 6503C1D
(dimensions in inch)

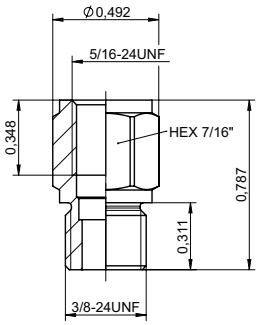

Type 6507B1A
(dimensions in inch)

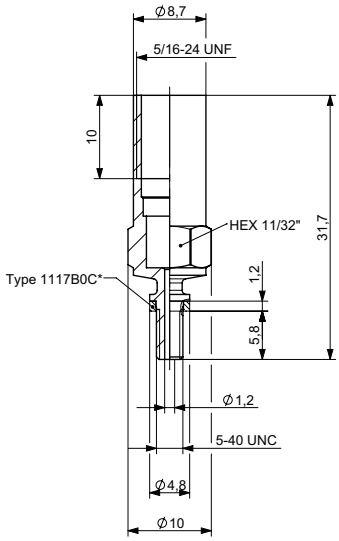

Type 6503C3A
(dimensions in inch)

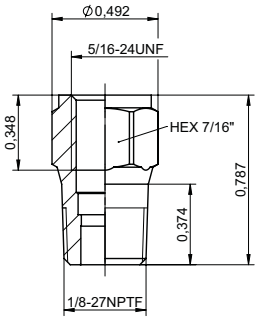

Note: Mounting holes, tightening torques and more can be found in the instruction manual.

3D CAD data can be downloaded free of charge from www.kistler.com/cad-catalog

601C_003-199e-11.22

This information corresponds to the current state of knowledge. Kistler reserves the right to make technical changes. Liability for consequential damage resulting from the use of Kistler products is excluded.

© 2017 ... 2022 Kistler Group, Eulachstraße 22, 8408 Winterthur, Switzerland Tel. +41 52 224 11 11, info@kistler.com, www.kistler.com. Kistler Group products are protected by various intellectual property rights. For more details visit www.kistler.com

KISTLER
measure. analyze. innovate.

Accessories (included)	Type/Art.-No.
• Sensor seal copper (5 pcs.)	1131BA0.15

Accessories (optional)	Type/Art.-No.
• Sensor seal copper (100 pcs)	1131BA0.15
• Sensor seal nickel (100 pcs)	1131BB0.20
• Floating clamp nut M7x0.75	6423B00
• Floating clamp nut 5/16-24-UNF	6423B11
• Adapter M10x1[1)]	6503C0A
• Adapter seal (S.S. / 25 pcs) for 6503C0A	1113C0B
• Adapter seal (Cu / 25 pcs) for 6503C0A	1113C0C
• Adapter 3/8-24-UNF[1)]	6503C1A
• Adapter seal (S.S. / 25 pcs) for 6503C1A	1113C1B
• Adapter seal (Cu / 25 pcs) for 6503C1A	1113C1C
• Adapter M3x0.5[1)]	6507B0A
• Adapter 5-40 UNC[1)]	6507B1A
• Adapter seal for 6507BxA	1117B0C
• Lubrication grease (Adapter)	1063
• Adapter M10x1 (ground isolated)	6503C0D
• Adapter 3/8-24 UNF (ground isolated)	6503C1D
• Adapter 1/8-27 NPTF	6503C3A
• Adapter M14x1.25	6501B0A
• Adapter seal (S.S / 1pc) for 6501B0A	1100A11
• Adapter M14x1.25 (water cooling)	6509B
• Adapter seal (Cu / 1pc) for 6509B	1111
• Temperature conditioning system	2621G
• Connector extender (configurable product)	6482A
• Extraction tool	1311
• Dummy sensor (standard housing)	6487AA
• Dummy sensor (short housing)	6487AB
• Step reamer (SC H7 Ø6.35/Ø5.58)	1331C
• Thread cutter M7x0.75	1351A0
• Thread cutter 5/16-24 UNF	1351A1
• RTV tool	1300A195
• RTV seal (S.S. / 25 pcs)	1131BC1.15
• RTV	1007A

[1)] All of the adapters are delivered with 1 pc. of each adapter seal type and 1 pc. lubrication grease Type 1063 (except adapters Type 6503C0D, 6503C1D, 6503C3A).

Ordering key (sensor)

Type 601C ☐ ☐ ☐

Output signal

Charge (PE)	**A**
Voltage (IEPE)	**B**

Housing

Standard housing (PE and IEPE)	**A**
Short housing (only PE)	**B**

Pressure range (only IEPE)

1.5 bar / 22 psi	**00001.5**
3.5 bar / 50 psi	**00003.5**
7 bar / 100 psi	**00007.0**
14 bar / 200 psi	**00014.0**
35 bar / 500 psi	**00035.0**
70 bar / 1 000 psi	**00070.0**
250 bar / 3 625 psi	**00250.0**

Ordering example	Type
PE sensor with standard housing	601CAA
PE sensor with short housing	601CAB
IEPE sensor (250 bar/3 625 psi)	601CBA00250.0

601C_003-199e-11.22

This information corresponds to the current state of knowledge. Kistler reserves the right to make technical changes. Liability for consequential damage resulting from the use of Kistler products is excluded.

© 2017 ... 2022 Kistler Group, Eulachstraße 22, 8408 Winterthur, Switzerland Tel. +41 52 224 11 11, info@kistler.com, www.kistler.com. Kistler Group products are protected by various intellectual property rights. For more details visit www.kistler.com